OPERATING WEIGHT: 5919 lb (2685 kg) | 7092 lb (3217 kg) | 8049 lb (3651 kg) NET ENGINE POWER: 26.8 hp (20.1 kW) | 26.8 hp (20.1kW) | 30.4 hp (22.7 kW) Interim Tier IV

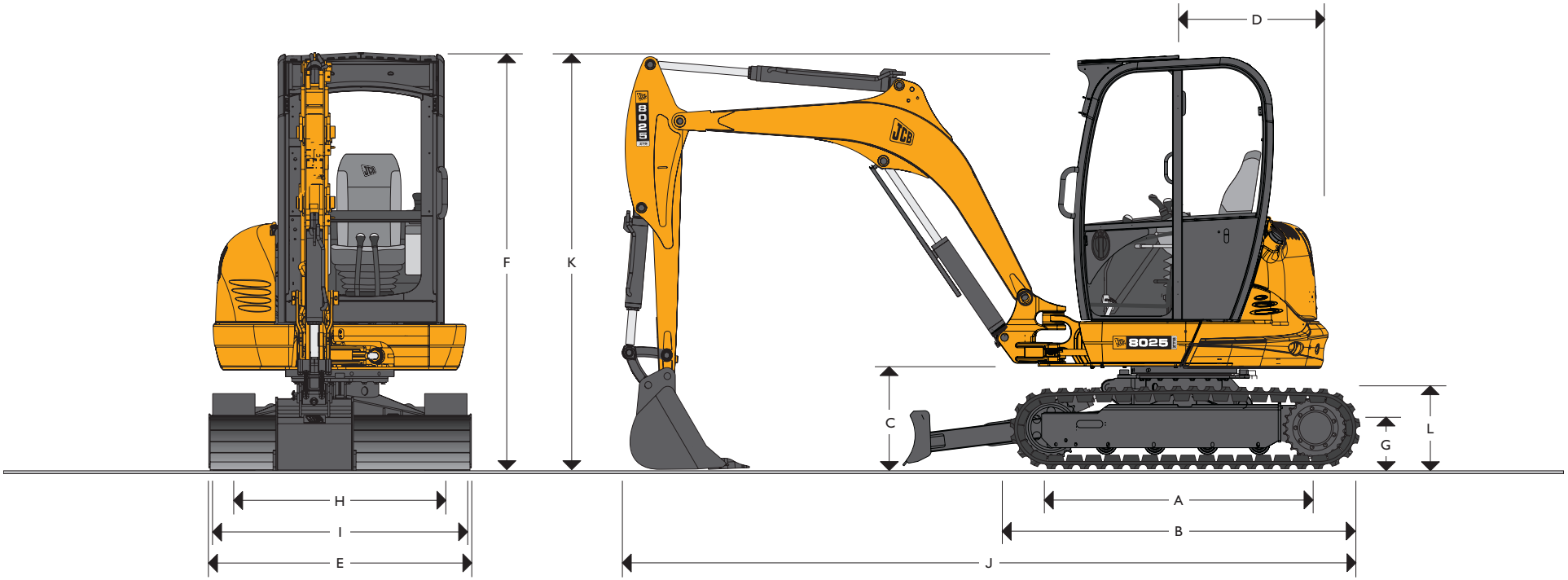

STATIC DIMENSIONS

Machine Model			8025 ZTS	8030 ZTS	8035 ZTS
			ft-in (mm)	ft-in (mm)	ft-in (mm)
A	Sprocket Idler Centers	ft-in (mm)	4-8¾ (1440)	5-3 (1597)	5-7 (1707)
B	Undercarriage Overall Length	ft-in (mm)	6-2½ (1895)	6-8¾ (2052)	7-2 (2176)
C	Kingpost Clearance	ft-in (mm)	2-0¼ (615)	2-0¼ (615)	2-0 (600)
D	Tailswing Radius	ft-in (mm)	3-5½ (750)	3-7½ (800)	2-9½ (862)
E	Overall Width of Superstructure	ft-in (mm)	5-1 (1550)	5-5 (1650)	5-5 (1656)
F	Height Over Cab	ft-in (mm)	8-1¼ (2470)	8-1¼ (2470)	8-1 (2770)

Machine Model			8025 ZTS	8030 ZTS	8035 ZTS
			ft-in (mm)	ft-in (mm)	ft-in (mm)
G	Ground Clearance	ft-in (mm)	1-0 (300)	1-0 (300)	1-0 (300)
H	Track Gauge	ft-in (mm)	4-1¼ (1252)	4-5 (1346)	4-9 (1450)
I	Width Over Tracks	ft-in (mm)	4-11 (1502)	5-5 (1652)	5-9 (1750)
J	Transport Length	ft-in (mm)	14-0½ (4280)	14-0¾ (4287)	14-8 (4462)
K	Transport Height	ft-in (mm)	8-1¼ (2470)	8-1¼ (2470)	8-1½ (2487)
L	Track Height	ft-in (mm)	1-6 (455)	1-7½ (500)	1-6 (470)

ENGINE

Machine Model		8025 ZTS & 8030 ZTS	8035 ZTS
Model		403D-15	403D-17
Fuel		Diesel	Diesel
Cooling		Water Cooled	Water Cooled
Gross Power	hp (kW) @ 2200 rpm	28 (20.9)	31.6 (23.6 kW)
Net Power	hp (kW) @ 2200 rpm	26.8 (20)	30.4 (22.7 kW)
Gross Torque	lbf-ft (Nm) @ 1600 rpm	70.8 (96)	78.4 (106.3 kW)
Net Torque	lbf-ft (Nm) @ 1600 rpm	67.9 (92)	75.5 (102.4 kW)
Displacement	cid (cc)	91.3 (1496)	101.5 (1663)
Gradeability	degrees	36	36
Starter Motor	hp (kW)	2.68 (2)	2.7 (2)
Battery	V (A)	12 (75)	12 (75)
Alternator	A	65	65
Emission Certification		Interim Tier IV	Interim Tier IV

MACHINE WEIGHTS

Machine Model		8025 ZTS	8030 ZTS	8035 ZTS
Operating Weight*	lb (kg)	5919 (2685)	7092 (3217)	8049 (3651)
Transport Weight	lb (kg)	5754 (2610)	6927 (3142)	7884 (3576)
With Canopy	lb (kg)	- 220.5 - (100)	- 220.5 - (100)	-220.5 (-100)
With FOGS Guard	lb (kg)	+ 79 + (36)	+ 79 + (36)	+ 79 + (36)
With Steel Tracks	lb (kg)	+ 132 + (60)	+ 154 + (70)	+ 154 + (70)
With Long Dozer	lb (kg)	+ 53 + (24)	N/A	N/A
With Suspension Seat	lb (kg)	+ 26.5 + (12)	N/A	N/A

*Operating weight to ISO 6016 including cab, rubber tracks, standard dipper, 18 in (460 mm) bucket, full tanks and a 165 lb (75kg) operator.

UNDERCARRIAGE

Machine Model		8025 ZTS	8030 ZTS	8035 ZTS
No of Bottom Rollers		3	4	4
Track Width	in (mm)	10 (250)	12 (300)	12 (300)
Ground Bearing Pressure	psi (kg/cm^2)	4.5 (0.31)	4.8 (0.33)	5.2 (.37)
Ground Clearance	in (mm)	12 (300)	12 (300)	12 (300)
Track Tensioning		Grease	Grease	Grease
Travel Speed – Low	mph (kph)	1.5 (2.4)	1.5 (2.4)	1.5 (2.4)
Travel Speed – High	mph (kph)	2.7 (4.3)	2.7 (4.3)	2.7 (4.3)
Tractive Effort	lbf (kN)	5530 (24.6)	6137 (27.3)	7194 (32)

OPERATOR ENVIRONMENT

Machine Model		8025 ZTS | 8030 ZTS| 8035 ZTS
Cab/Canopy Height	ft-in (mm)	4-11¾ (1517)
Cab/Canopy Length	ft-in (mm)	3-11½ (1205)
Cab/Canopy Width	ft-in (mm)	3-2½ (980)
Door Aperture Width	ft-in (mm)	1-9 (532)

HYDRAULIC SYSTEM

		8025 ZTS	8030 ZTS	8035 ZTS
Pump		2 Variable & 1 Gear	2 Variable & 1 Gear	2 Variable & 1 Gear
Nominal Output	lpm	102	102	110
Nominal Output	gal/min	26.9	26.9	29.1
Excavator/Track Main Relief	psi (bar)	3191 (220)	3553 (245)	3553 (245)
Slew Main Relief	psi (bar)	2756 (190)	2756 (190)	2756 (190)
Auxiliary Hydraulic Flow	gal (l)	15.3 (58)	15.3 (58)	18.2 (69)
Hydraulic Motors		Piston	Piston	Piston

SERVICE CAPACITIES

Machine Model		8025 ZTS | 8030 ZTS | 8035 ZTS
Fuel Tank	gal (l)	10.6 (40)
Engine Coolant	gal (l)	2.3 (8.5)
Engine Oil	gal (l)	1.2 (4.5)
Hydraulic System	gal (l)	18.5 (70)
Hydraulic Tank	gal (l)	11.9 (45)

WORKING RANGE

	Machine Model		8025 ZTS	8030 ZTS	8035 ZTS
	Dipper Length	ft-in (mm)	3-7¼ (1100)	4-2¼ (1300)	5-0 (1525)
A	Max Digging Reach	ft-in (mm)	15-10 (4828)	16-6 (5031)	17-10 (5436)
B	Max Digging Reach on Ground	ft-in (mm)	15-4½ (4691)	16-1 (4901)	17-5 (5315)
C	Max Digging Depth – Dozer Up	ft-in (mm)	8-5½ (2580)	9-2 (2794)	10-5 (3179)
	Max Digging Depth – Dozer Down	ft-in (mm)	9-3½ (2832)	10-2¾ (3119)	11-6 (3512)
D	Max Digging Height	ft-in (mm)	14-2½ (4333)	14-7¼ (4453)	15-1 (4601)
E	Max Dump Height	ft-in (mm)	10-4¼ (3158)	10-6 (3205)	11-5 (3482)
F	Max Height to Dipper Nose Pivot Pin	ft-in (mm)	12-1½ (3700)	12-6 (3808)	13-2 (4007)
G	Max Vertical Wallcut Depth	ft-in (mm)	5-0¾ (1542)	5-8½ (1741)	7-1¼ (2165)
	Min Front Swing Radius (no offset)	ft-in (mm)	6-11½ (2125)	7-0½ (2150)	8-2 (2492)
	Min Front Swing Radius (fully offset)	ft-in (mm)	6-3¼ (1912)	6-7 (2010)	5-4 (1630)
	Boom Swing Left	degrees	45	45	45
	Boom Swing Right	degrees	60	60	60
	Bucket Rotation	degrees	189	186	186
	Dipper Rotation	degrees	118.5	119	119
	Bucket Tearout	lbf (kN)	24 (5395)	28 (6295)	32 (7193)
	Dipper Tearout	lbf (kN)	15 (3372)	17 (3822)	20 (4496)
	Slew Speed	rpm	9.6	9.6	9.6

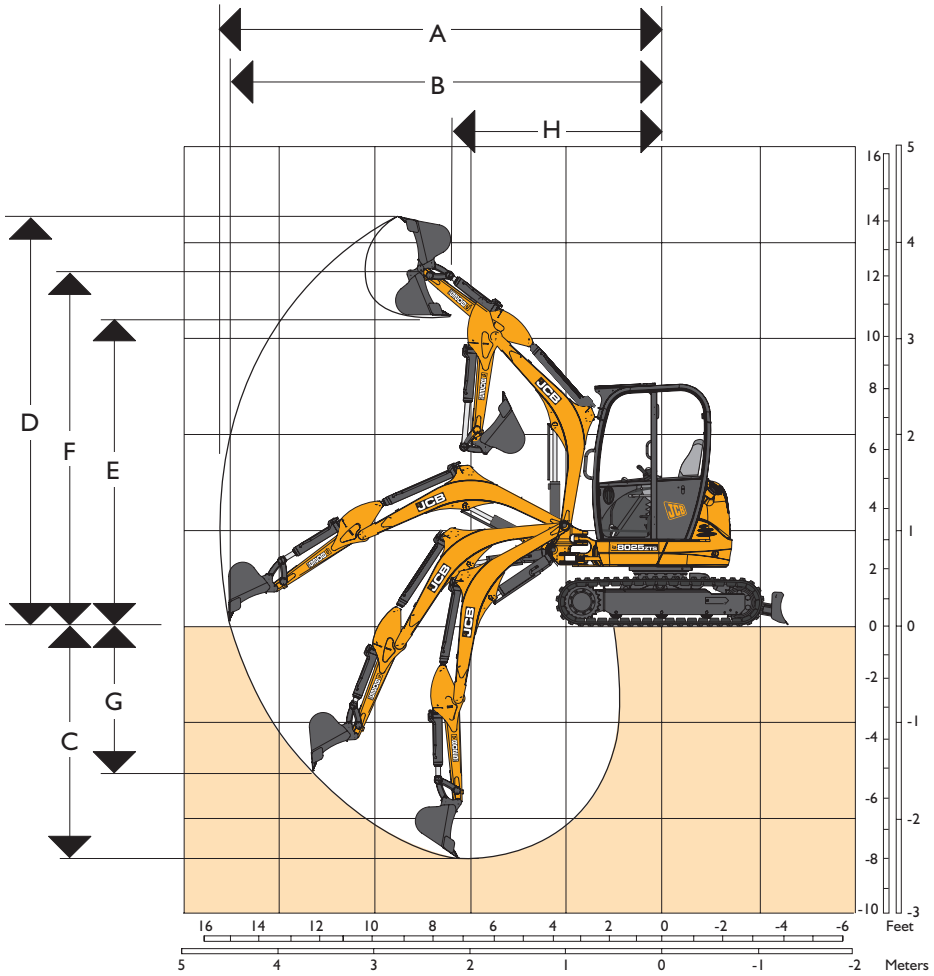

STANDARD EQUIPMENT

ROPS & TOPS certified canopy, full audio/visual warning systems, slew travel lock, control isolator, external lockable toolbox, 12 V power socket, lifting points, rubber tracks, dual pattern controls (ISO / SAE change over), boom worklight, track pedals, suspension seat, double acting hydraulics, boom ram protection, dozer blade, 43.3 in dipper, engine fan guard.

OPTIONAL EQUIPMENT

ROPS & TOPS certified fully glazed cab (includes heater, interior light, cigarette lighter, foldback door, gas strut assisted front screen), suspension seat, steel tracks, cab/canopy mounted worklights, double acting auxiliary circuit, FOGS roof guard, mirror, toolkit, radio, biodegradeable hydraulic oil, fire extinguisher, sunblind (cab builds), travel alarm, immobilizer, yellow roof molding, hose burst check valves, digging buckets (9 in to 24 in), 39 in ditching/grading bucket, hydraulic breakers, auger, mechanical quickhitch, air conditioning (not available on 8025 ZTS).

EEC NOISE LEVELS (95/27/EC DYNAMIC)

Machine Model		8025 ZTS	8030 ZTS	8035 ZTS
Cab / Canopy External	dB (LwA)	95	95	95

DOZER BLADE

Machine Model		8025 ZTS	8030 ZTS	8035 ZTS
Max Height (above ground)	ft-in (mm)	1-1½ (340)	1-4¼ (414)	1-4 (413)
Dig Depth (below ground)	ft-in (mm)	1-3½ (398)	2-0½ (622)	2-1 (629)
Approach Angle	degrees	35	24.5	24.5
Width	ft-in (mm)	5-1 (1550)	5-5 (1650)	5-8 (1734)
Height	ft-in (mm)	1-1 (335)	1-1 (335)	1-1 (326)
Reach in Front of Tracks	ft-in (mm)	1-0½ (322)	2-2¾ (681)	2-2 (668)

8025 ZTS LIFT CAPACITIES – Standard Dozer, 10 in (250 mm) Rubber Tracks, 3 ft-7¼ in (1,100 mm) Dipper, No Bucket.

	Reach from Slew Center															
Load Point	8 ft 2½ in (2500 mm)			9 ft 10 in (3000 mm)			11 ft 6 in (3500 mm)			13 ft 1 in (4000 mm)			Capacity at Maximum Reach			
Height	Dozer Up	Dozer Down		Dozer Up	Dozer Down		Dozer Up	Dozer Down		Dozer Up	Dozer Down		Dozer Up	Dozer Down		
ft-in (mm)	lb	lb	lb	lb	lb	lb	lb	lb	lb	lb	lb	lb	lb	lb	lb	ft-in (mm)
6-7 (2000)				860*	1382*	646*	619	1320*	465				480	1320*	359	12-9 (3886)
4-11 (1500)	1042	2175*	780*	793	1726*	595	595	1488*	447	463	1400*	348	4646	1400*	348	13-1 (3988)
3-3 (1000)	1009	2684*	756	719	1902*	540	571	1620*	428	439	1400*	328	419	1426*	313	13-5 (4089)
1-8 (500)	926	2959*	694	712	2246*	533	571	1787*	428	472	1567*	353	472	1567*	535	13-5 (4089)
Ground Level	926	3135*	694	719	2440*	540	571	1920*	428		1620*		472	1620*	353	13-5 (4089)
-1-8 (-500)	884	2870*	663	719	2431*	540	571	1876*	428				518	1708*	388	12-0 (3658)
-3-3 (-1000)	926	2839*	694	703	2114*	527							595	1690*	447	10-10 (3302)

8030 ZTS LIFT CAPACITIES – Standard Dozer, 12 in (300 mm) Rubber Tracks, 4 ft-2¼ in (1,300 mm) Dipper, No Bucket.

	Reach from Slew Center															
Load Point	8 ft 2½ in (2500 mm)			9 ft 10 in (3000 mm)			11 ft 6 in (3500 mm)			13 ft 1 in (4000 mm)			Capacity at Maximum Reach			
Height	Dozer Up	Dozer Down		Dozer Up	Dozer Down		Dozer Up	Dozer Down		Dozer Up	Dozer Down		Dozer Up	Dozer Down		
ft-in (mm)	lb	lb	lb	lb	lb	lb	lb	lb	lb	lb	lb	lb	lb	lb	lb	ft-in (mm)
6-7 (2000)							992	1294*	893	785		712	778	1322*		13-5 (4089)
4-11 (1500)	1832	2618*	1455*	1199	1851*	1142	943	1488*	893	778	1408*	703	703	1400*		13-8 (4166)
3-3 (1000)	1605	2790*	1439	1199	2021*	1109	926	1706*	851	752	1505*	694	668	1468*	646	14-0 (4267)
1-8 (500)	1521	3401*	1340	1148	2354*	1009	926	1909*	818	752	1644*	679	661	1534*	646	13-10 (4216)
Ground Level	1406	3374*	1314	1091	2550*	1001	910	2072*	802	745	1677*	670	712	1697*	670	13-5 (4089)
-1-8 (-500)	1327	3326*	1256	1042	2616*	983	893	2032*	802				756	1726*	712	12-8 (3861)
-3-3 (-1000)	1355	3280*	1241	1091	2781*	926							910	1869*	778	11-6 (3505)

8035 ZTS LIFT CAPACITIES – Standard Dozer, 12 in (300 mm) Rubber Tracks, 5 ft 0 in (1,525 mm) Dipper, No Bucket.

	Reach from Slew Center														
Load Point	8 ft 2½ in (2500 mm)			9 ft 10 in (3000 mm)			11 ft 6 in (3500 mm)			13 ft 1 in (4000 mm)			Capacity at Maximum Reach		
Height	Dozer Up	Dozer Down		Dozer Up	Dozer Down		Dozer Up	Dozer Down		Dozer Up	Dozer Down		Dozer Up	Dozer Down	
ft-in (mm)	lb	lb	lb	lb	lb	lb	lb	lb	lb	lb	lb	lb	lb	lb	lb
6-7 (2000)				1307*	1345*	1380*	1274*	1360*	1336*	860	1373*	950	694	1314*	728
4-11 (1500)	2103*	2273*	2196*	1360	1865*	1490	1080	1664*	1151	851	1536*	913	688	1473*	694
3-3 (1000)	1764	3012*	1865	1336	2339*	1354	1025	1936*	1071	855	1883*	897	675	1567*	677
1-8 (500)	1587	3481*	1764	1177	2657*	1402	1049	2196*	1060	809	1872*	875	694	1038*	690
Ground Level	1455	3702*	1735	1166	3183*	1332	966	2350*	1065	796	1947*	851	664	1036*	1151
-1-8 (-500)	1508	3977*	1673	1224	3232*	1272	983	2480*	1047	833	2187*	860	743	1806*	743
-3-3 (-1000)	1523	3732*	1702	1100	2912*	1290	884	2463*	1060	796	2061*	880	798	1894*	849

Lift capacity front and rear

Lift capacity full circle

Notes: 1. Lifting capacities are based on ISO 10567, that is: 75% of minimum tipping load or 87% of hydraulic lift capacity, whichever is the less. Lifting capacities marked* are based on hydraulic capacity. 2. Lift capacities assume that the machine is on firm, level ground and equipped with an approved lifting point. 3. A bucket must be fitted when lifting, the weight of this bucket must be deducted from the above lift capacities 4. Lift capacities may be limited by local regulations. Please refer to your dealer.

A GLOBAL COMMITMENT TO QUALITY

JCB's total commitment to its products and customers has helped it grow from a one-man business into one of the world's largest manufacturers of backhoe loaders, crawler excavators, wheeled excavators, telescopic handlers, wheeled loaders, dump trucks, rough terrain fork lifts, industrial fork lifts, mini/midi excavators, skid steer loaders and tractors.

By making constant and massive investments in the latest production technology, the JCB factories have become some of the most advanced in the world.

By leading the field in innovative research and design, extensive testing and stringent quality control, JCB machines have become renowned all over the world for performance, value and reliability.

And with an extensive dealer sales and service network in over 150 countries, we aim to deliver the best customer support in the industry.

Through setting the standards by which others are judged, JCB has become one of the world's most impressive success stories.

JCB Headquarters Savannah, 2000 Bamford Blvd, Savannah, GA 31322 Tel: (912) 447-2000 Fax: (912) 447-2299 www.jcb.com

JCB reserves the right to change design, materials and/or specifications without notice. Specifications are applicable to units sold in the United States and Canada. The JCB logo is a registered trademark of J C Bamford Excavators Ltd.

DWUSA 2979 12/11